Flat fan nozzles

Series 632 / 633

Standard design with high-precision spray angle, exact flow rate, and extremely narrow spray depth, achieved through close manufacturing tolerances. Parabolic distribution of liquid ensures that spray pipes equipped with these nozzles show an extremely uniform total liquid distribution. Conical, self-sealing thread connection. The design of spray headers is very easy due to the thread connection of the nozzles. The entire product range is available at short notice, due to the modular design.

Applications:
Cleaning, pickling, coating, surface treatment, rinsing.

Mat. no. 17 (∢ 20°-75°)

Mat. no. 17 (∢ 90°-120°)

Mat no. 5E

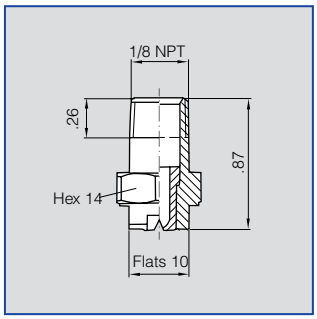

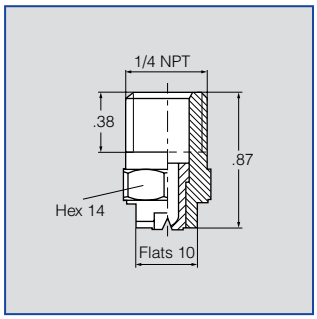

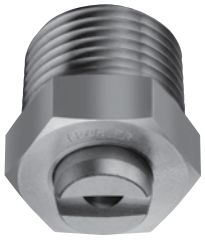

3/8" or 1/2" version

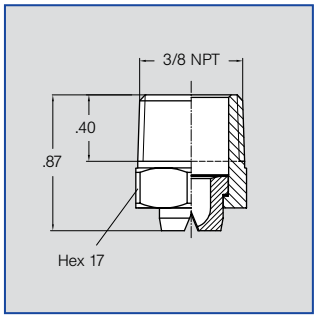

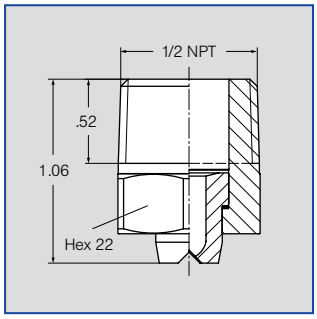

Spray angle	Ordering no.							Equivalent Orifice diam. [in]	Free passage [in]	Flow Rate (Gallons Per Minute)							Spray width B at p=30 psi	
	Type	Mat. no. 17[1] AISI 316Ti / AISI 316L	Mat. no. 5E PVDF	Connection Male NPT 1/8"	1/4"	3/8"	1/2"			10 psi	20 psi	2 bar (liters per minute)	40 psi	60 psi	80 psi	100 psi	H=10"	H=20"
20°	**632. 441**	○	○	**BA**	**BC**	-	-	.053	.043	.19*	.27	1.3	.39	.48	.55	.61	3	6
	632. 481	○	○	**BA**	**BC**	-	-	.059	.047	.25*	.35	1.6	.50	.61	.70	.78	3	6
30°	**632. 482**	○	○	**BA**	**BC**	-	-	.059	.043	.25*	.35	1.6	.50	.61	.70	.78	5	9
	632. 562	○	○	**BA**	**BC**	-	-	.079	.059	.39	.55	2.5	.78	.95	1.1	1.2	5	9
	632. 642	○	-	-	**BC**	-	-	.099	.071	.62	.88	4.0	1.2	1.5	1.8	2.0	5	9
	632. 722	○	-	-	**BC**	-	-	.118	.095	.98	1.4	6.3	2.0	2.4	2.8	3.1	5	9
	632. 762	○	-	-	**BC**	-	-	.138	.106	1.1	1.5	8.0	2.6	3.3	4.0	4.7	5	10
	632. 802	○	-	-	**BC**	-	-	.158	.122	1.6	2.2	10.0	3.1	3.8	4.4	4.9	5	10

[1] We reserve the right to deliver AISI 316Ti or AISI 316L under the material no. 17.
*differing spray pattern
Subject to technical modifications.

Continued on next page.

Example of ordering:	Type	+	Material no.	+	Conn.	=	Ordering no.
	632. 441	+	17	+	BC	=	632. 441. 17. BC

Conversion formula for the above series: $V_2 = V_1 \sqrt{\frac{P_2}{P_1}}$

Flat fan nozzles

Series 632 / 633

Spray angle	Ordering no.							Equivalent Orifice diam. [in]	Free passage [in]	Flow Rate (Gallons Per Minute)							Spray width B at p=psi	
	Type	Mat. no. 17[1] AISI 316Ti / AISI 316L	Mat. no. 5E PVDF	Connection Male NPT ⅛/8"	1/4"	3/8"	1/2"			10 psi	20 psi	liters per minute 2 bar	40 psi	60 psi	80 psi	100 psi	H=10"	H=20"
45°	**632. 483**	○	○	**BA**	**BC**	-	-	.059	.043	.25*	.35	1.6	.50	.61	.70	.78	7	13
	632. 563	○	○	**BA**	**BC**	-	-	.079	.055	.39	.55	2.5	.78	.95	1.1	1.2	7	14
	632. 643	○	○	**BA**	**BC**	-	-	.098	.071	.53	.75	4.0	1.3	1.7	2.0	2.4	8	15
	632. 673	○	-	-	**BC**	**BE**	-	.106	.083	.74	1.0	4.8	1.5	1.8	2.1	2.3	8	15
	632. 723	○	-	-	**BC**	**BE**	-	.118	.095	.98	1.4	6.3	2.0	2.4	2.8	3.1	8	15
	632. 763	○	-	-	**BC**	**BE**	-	.138	.102	1.1	1.5	8.0	2.6	3.3	4.0	4.7	8	15
	632. 803	○	-	-	**BC**	**BE**	**BG**	.158	.118	1.6	2.2	10.0	3.1	3.8	4.4	4.9	8	15
	632. 843	○***	-	-	**BC**	-	**BG**	.177	.138	1.9	2.7	12.5	3.9	4.8	5.5	6.1	8	15
	632. 883	○	-	-	-	-	**BG**	.197	.157	2.5	3.5	16.0	5.0	6.1	7.0	7.9	9	17
	632. 923	○	-	-	-	-	**BG**	.217	.165	3.1	4.4	20.0	6.2	7.6	8.8	9.8	9	17
	632. 963	○	-	-	-	-	**BG**	.236	.185	3.9	5.5	25.0	7.8	9.5	11.0	12.3	9	17
60°	**632. 484**	○	○	**BA**	**BC**	-	-	.059	.039	0.2*	0.4	1.6	0.5	0.6	0.7	0.8	10	20
	632. 514	○	○	**BA**	**BC**	-	-	.065	.043	0.3*	0.4	1.9	0.6	0.7	0.8	0.9	11	20
	632. 564	○	○	**BA**	**BC**	-	-	.079	.051	0.4	0.5	2.5	0.8	1.0	1.1	1.2	11	21
	632. 604	○	○	**BA**	**BC**	-	-	.087	.059	0.5	0.7	3.2	1.0	1.2	1.4	1.6	11	22
	632. 644	○	○**	-	**BC**	**BE**	-	.099	.063	0.6	0.9	4.0	1.2	1.5	1.8	2.0	12	22
	632. 674	○	○**	-	**BC**	**BE**	-	.106	.071	0.7	1.1	4.8	1.5	1.8	2.1	2.4	12	23
	632. 724	○	○**	-	**BC**	**BE**	-	.118	.083	1.0	1.4	6.3	2.0	2.4	2.8	3.1	12	23
	632. 764	○	-	-	**BC**	**BE**	-	.138	.091	1.2	1.8	8.0	2.5	3.0	3.5	3.9	12	23
	632. 804	○***	○**	-	**BC**	-	**BG**	.158	.102	1.6	2.2	10.0	3.1	3.8	4.4	4.9	12	23
	632. 844	○***	○**	-	**BC**	-	**BG**	.177	.118	1.9	2.7	12.5	3.9	4.8	5.5	6.1	12	23
	632. 884	○***	○**	-	**BC**	-	**BG**	.197	.134	2.5	3.5	16.0	5.0	6.1	7.0	7.8	12	22
	632. 924	○	-	-	-	-	**BG**	.217	.165	3.1	4.4	20.0	6.2	7.6	8.8	9.8	13	25
	632. 964	○	-	-	-	-	**BG**	.236	.185	3.9	5.5	25.0	7.8	9.5	11.0	12.3	13	25
	633. 004	○	-	-	-	-	**BG**	.276	.205	4.9	6.9	31.5	9.8	12.0	13.8	15.5	13	25
	633. 044	○	-	-	-	-	**BG**	.315	.217	6.2	8.8	40.0	12.4	15.2	17.6	19.6	13	25
	633. 084	○	-	-	-	-	**BG**	.354	.268	7.8	11.0	50.0	15.5	19.0	21.9	24.5	13	25
90°	**632. 566**	○	○	**BA**	**BC**	-	-	.079	.043	0.4	0.5	2.5	0.8	1.0	1.1	1.2	18	33
	632. 606	○	○	**BA**	**BC**	-	-	.087	.047	0.5	0.7	3.2	1.0	1.2	1.4	1.6	18	34
	632. 646	○	○**	-	**BC**	**BE**	-	.098	.051	0.6	0.9	4.0	1.2	1.5	1.8	2.0	18	34
	632. 676	○	○**	-	**BC**	**BE**	-	.106	.055	0.7	1.1	4.8	1.5	1.8	2.1	2.4	18	34
	632. 726	○	○**	-	**BC**	**BE**	-	.118	.067	1.0	1.4	6.3	2.0	2.4	2.8	3.1	18	34
	632. 766	○	○**	-	**BC**	**BE**	-	.138	.075	1.2	1.8	8.00	2.5	3.0	3.5	3.9	19	35
	632. 806	○***	○**	-	**BC**	-	**BG**	.158	.095	1.6	2.2	10.0	3.1	3.8	4.4	4.9	19	35
	632. 846	○***	○**	-	**BC**	-	**BG**	.177	.095	1.9	2.7	12.5	3.9	4.8	5.5	6.1	19	35
	632. 886	○***	○**	-	**BC**	-	**BG**	.197	.122	2.5	3.5	16.0	5.0	6.1	7.0	7.8	19	36
	632. 926	○	-	-	-	-	**BG**	.217	.165	3.1	4.4	20.0	6.2	7.6	8.8	9.8	21	40
	632. 966	○	-	-	-	-	**BG**	.236	.185	3.9	5.5	25.0	7.8	9.5	11.0	12.3	21	40

[1] We reserve the right to deliver AISI 316Ti or AISI 316L under the material no. 17.

Continued on next page.

*differing spray pattern
**only available with code BC
***only available with code BG
Subject to technical modifications.

Example of ordering:	Type	+	Material no.	+	Conn.	=	Ordering no.
	632. 483	+	17	+	BA	=	632. 483. 17. BA

Conversion formula for the above series: $V_2 = V_1 \sqrt{\frac{P_2}{P_1}}$

Flat fan nozzles

Series 632 / 633

Spray angle	Ordering no.							Equivalent Orifice diam. [in]	Free passage [in]	Flow Rate (Gallons Per Minute)							Spray width B at p=30 psi	
	Type	Mat. no. 17[1] AISI 316Ti / AISI 316L	Mat. no. 5E PVDF	Connection Male NPT 1/8"	1/4"	3/8"	1/2"			10 psi	20 psi	liters per minute 2 bar	40 psi	60 psi	80 psi	100 psi	H=10"	H=20"
120°	**632.607**	○	-	**BA**	**BC**	-	-	.087	.043	.49	.69	3.2	.98	1.2	1.4	1.5	27	51
	632.647	○***	○**	-	**BC**	**BE**	-	.099	.051	.62	.88	4.0	1.2	1.5	1.8	2.0	27	51
	632.677	○***	○**	-	**BC**	**BE**	-	.106	.055	.74	1.0	4.8	1.5	1.8	2.1	2.3	28	52
	632.727	○***	○**	-	**BC**	**BE**	-	.118	.063	.98	1.4	6.3	2.0	2.4	2.8	3.1	29	54
	632.767	○	-	-	**BC**	**BE**	-	.138	.067	1.2	1.8	8.0	2.5	3.0	3.5	3.9	30	55
	632.807	○	-	-	**BC**	-	**BG**	.158	.079	1.6	2.2	10.0	3.1	3.8	4.4	4.9	31	57
	632.847	○	-	-	**BC**	-	**BG**	.177	.091	1.9	2.7	12.5	3.9	4.8	5.5	6.1	31	57
	632.887	○	-	-	-	-	**BG**	.197	.102	2.5	3.5	16.	5.0	6.1	7.0	7.9	31	57
	632.927	○	-	-	-	-	**BG**	.217	.114	3.1	4.4	20.0	6.2	7.6	8.8	9.8	31	57

[1] We reserve the right to deliver AISI 316Ti or AISI 316L under the material no. 17.

*differing spray pattern
**only available with conn. BC
***only available with conn. BG
Subject to technical modifications.

Example of ordering:	**Type**	**+**	**Material no.**	**+**	**Conn.**	**=**	**Ordering no.**
	632. 607	**+**	**17**	**+**	**BA**	**=**	**632. 607. 17. BA**

Conversion formula for the above series: $V_2 = V_1 \sqrt{\frac{P_2}{P_1}}$